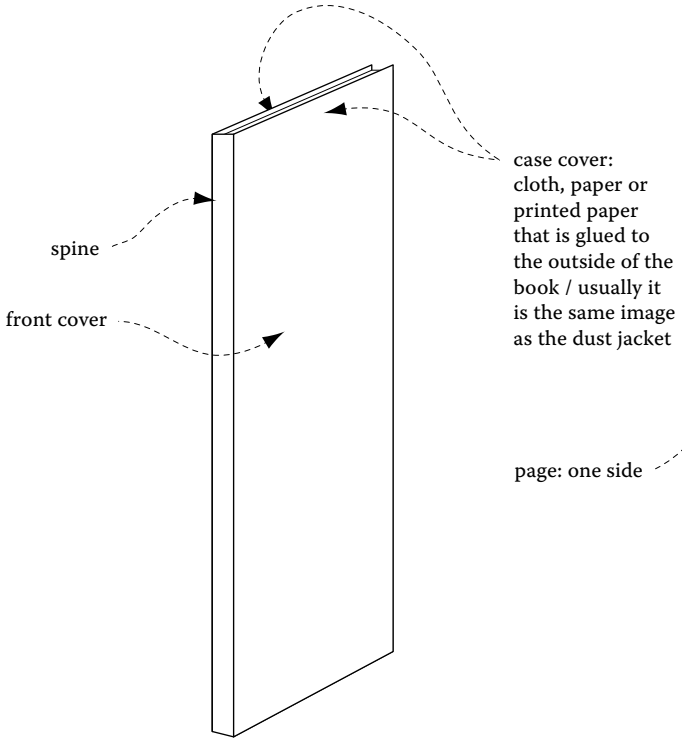

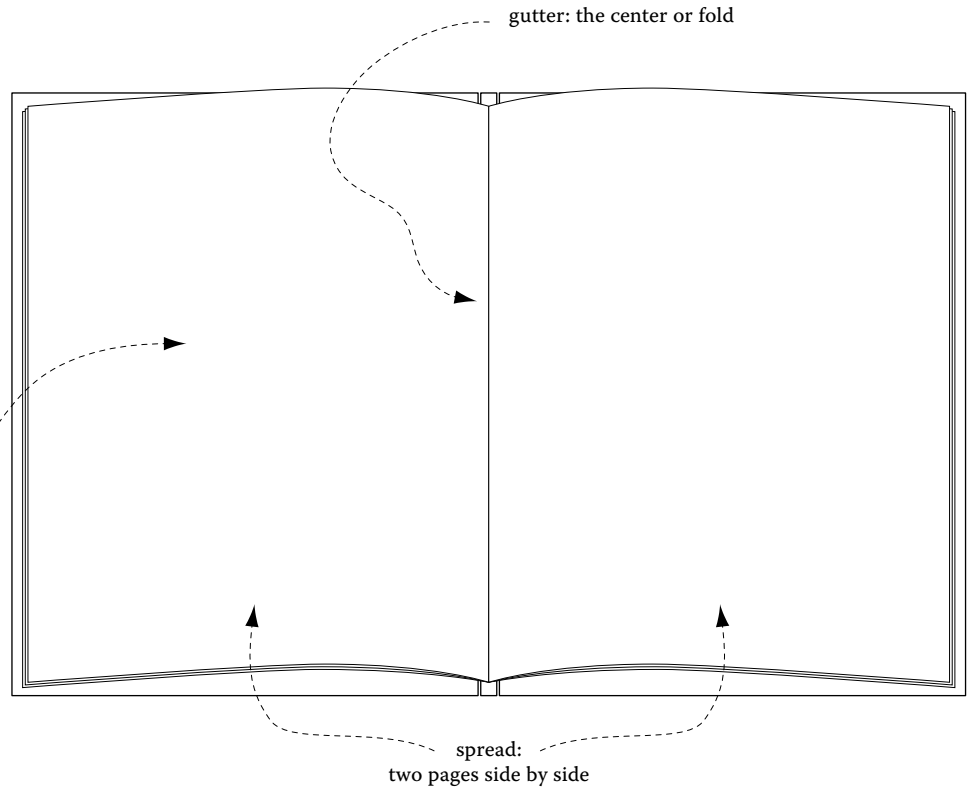

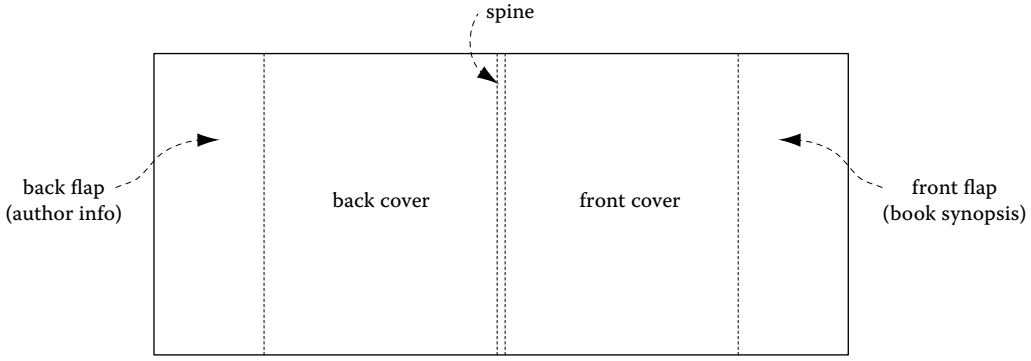

dust jacket: folds around book

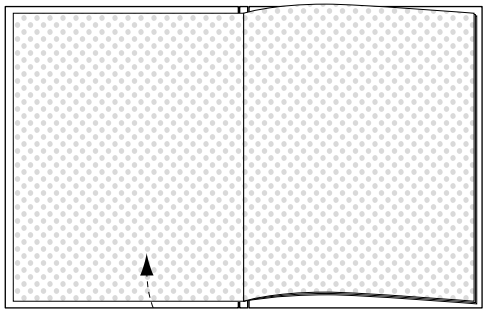

end paper:
can be plain, colored or printed / at the beginning
and end of the book / used to hold the pages in the book